# OPERATION OF DUAL KEY ILD

## UN-LOCK

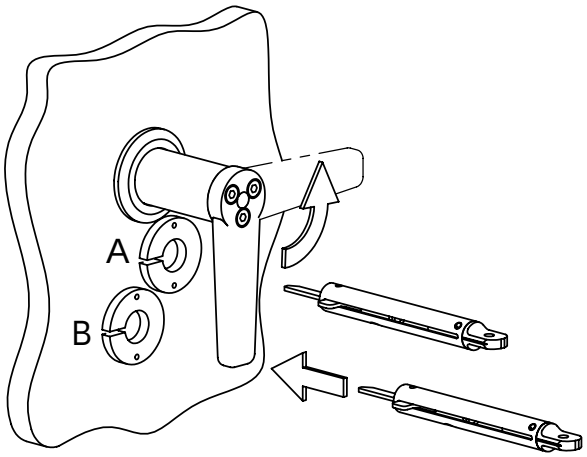


1. ROTATE HANDLE 90° CCW & INSERT KEYS

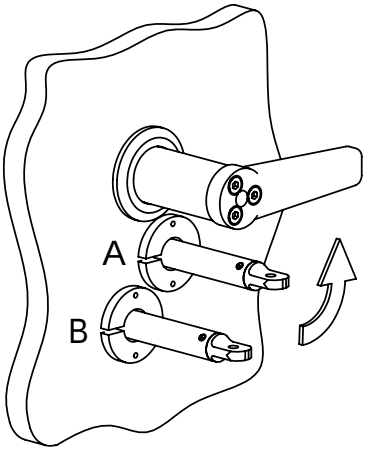


2. ROTATE KEYS 180° CCW
(NOTE: KEYS CANNOT BE REMOVED)

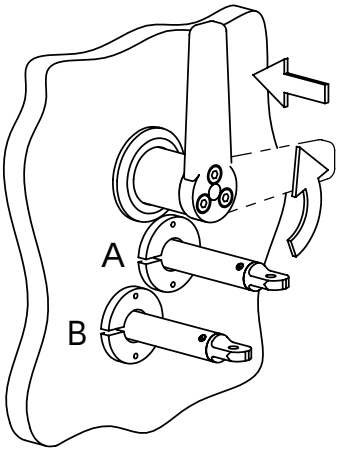


3. PUSH IN HANDLE UNTIL IT STOPS
& ROTATE HANDLE 90° CCW TO
DISENGAGE LOCKING BOLT

## LOCK

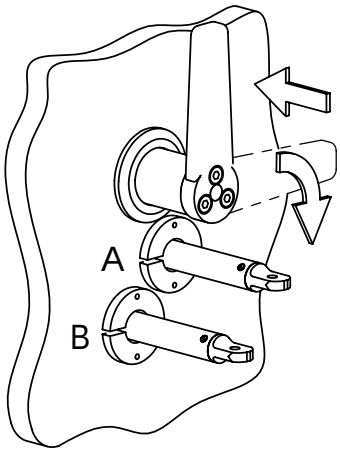


1. PUSH IN HANDLE & ROTATE HANDLE
90° CW TO ENGAGE LOCKING BOLT

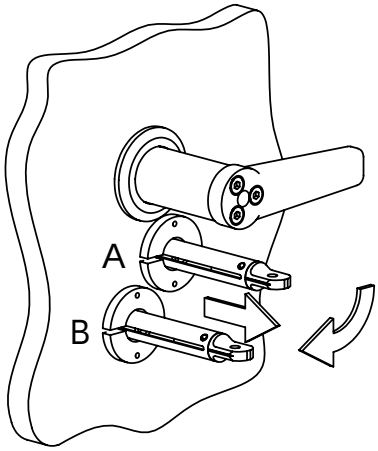


2. ROTATE KEYS 180° CW &
REMOVE KEYS TO SECURE LOCK

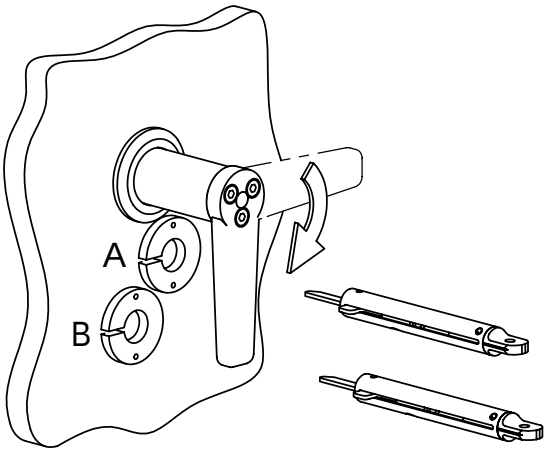


3. ROTATE HANDLE 90° CW

Installation coordinator (805-982-3558)
http://locks.nfesc.navy.mil