Applying New Thinking

ILD

INTERNAL LOCKING DEVICE

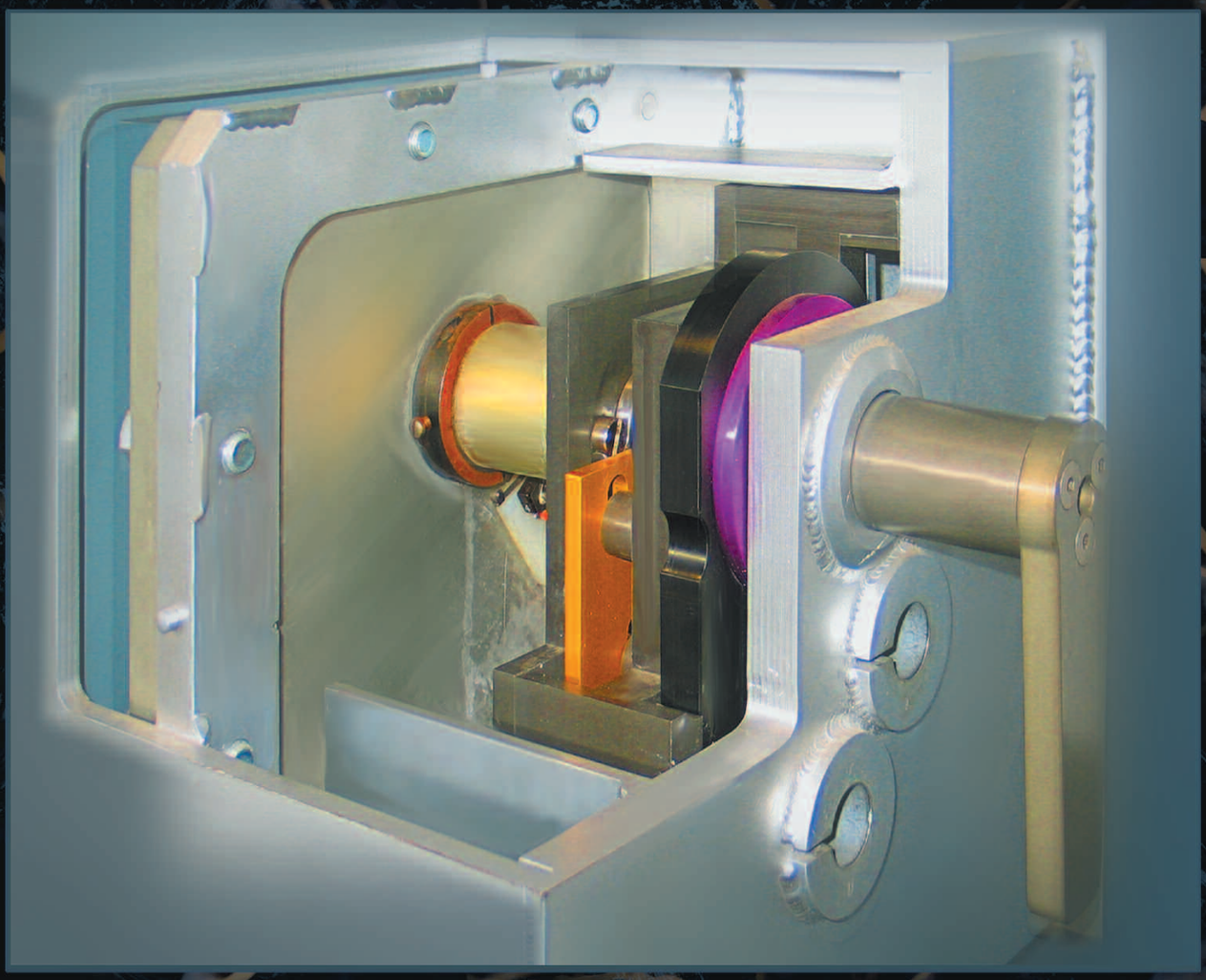

THE NEXT GENERATION
OF HIGH SECURITY LOCKING SYSTEMS

Facing the Challenges
of a Changing World

OPERATION

To open either the single or dual key ILD, the operating handle is first rotated to allow key access. The key(s) are then inserted and rotated. The operating handle is pushed and turned to release the bolts and allow the door to open.

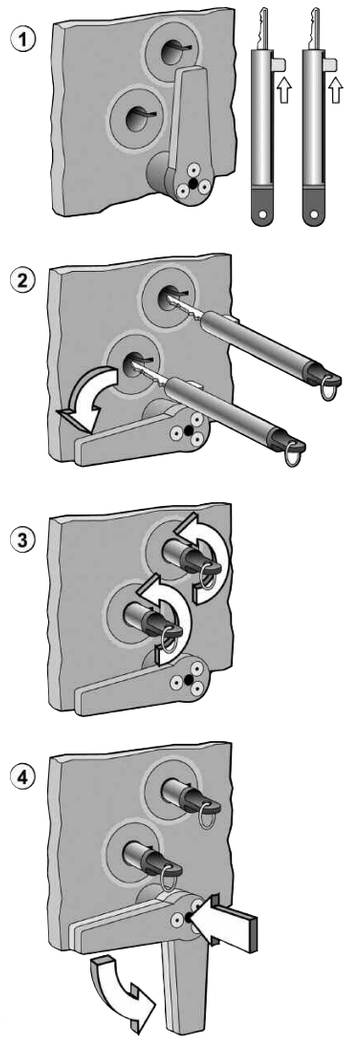

Open Operation

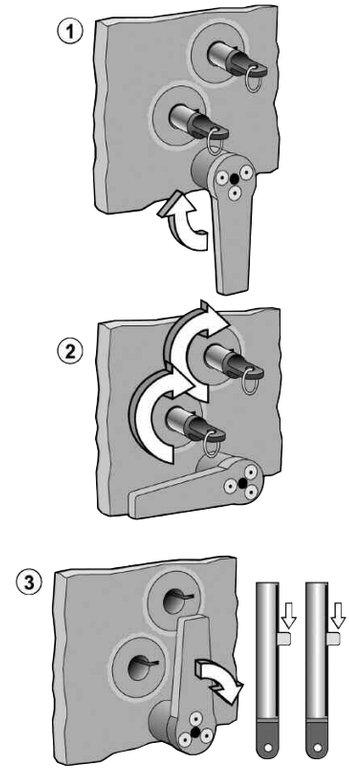

Closed Operation

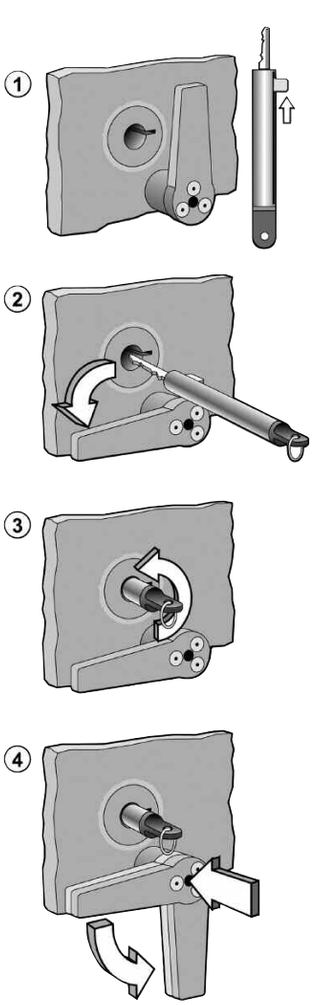

Open Operation

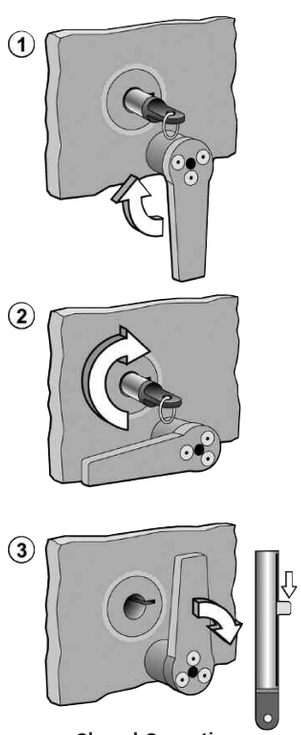

Closed Operation

To close the door the steps are repeated in reverse order. The ILD requires no maintenance. The bolt work needs only occasional lubrication to ensure trouble-free operation. It has been vigorously tested for reliability and will provide many years of dependable service.

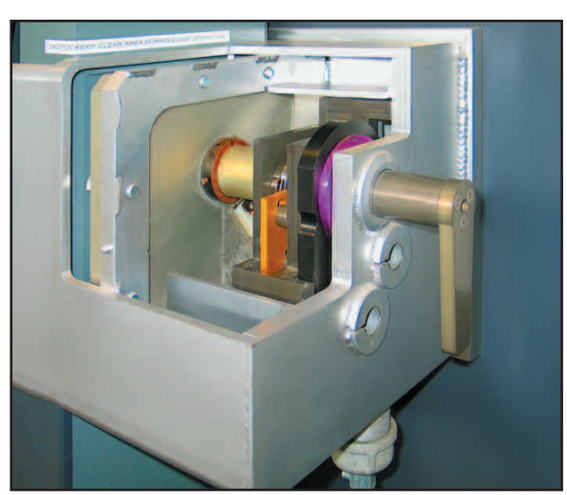

BACKGROUND

The ILD was developed to address security and operational deficiencies in high security padlocks and hasps currently used to secure Department of Defense (DoD) weapons storage magazines. The Office of the Assistant Secretary of Defense (OSD C3I) approved the ILD as "an alternative to the current high security padlock and hasp requirement" on 6 March 2001 for protection of conventional arms, ammunition, and explosives. It has subsequently been approved for use on structures protecting chemical and nuclear weapons. The ILD can be installed on hinged or sliding doors and provides numerous critical security and operational advantages over high security padlock and hasp systems.

FEATURES & BENEFITS

- *Easy to operate.*
- *Five times more resistant to forced entry attack than high security padlock & hasps systems.*
- *Shutter plate shelters the lock cylinder from hostile environmental conditions:*
  - *resists wind-driven sand, dust, rain, ice, corrosive salt spray, extreme heat & cold, freeze-thaw conditions, & insect infestations.*
- *Unique key guide that allows quick, fluid key operation & greatly reduces the possibility of key breakage common with high security padlocks.*
- *Not subject to door alignment problems caused by temperature change, sagging, or wear.*
- *Adaptable to most types of door/closure installations.*
- *Easily integrated with electronic monitoring and access control systems.*

PERFORMANCE CRITERIA

Approved designs and new products in development will address security vulnerabilities in high security padlock and hasp systems currently used on structures protecting nuclear, chemical, and category I and II conventional weapons. Systems will provide ten-minutes of protection against forced entry attacks. Requirements include cost effectiveness, ten-minutes of forced entry protection, operational in all environments, optional biometric operator verification and integration with MDARS System.

Dual key universal mount ILD on double-sliding door

Dual key universal mount ILD on swinging door

SYSTEM

A complete ILD system consists of the ILD, mounting hardware, and bolt work for either sliding or swinging doors. The ILD is approximately 8" x 3" x 5" and weighs less than ten pounds. The bolt work systems for swinging and sliding magazine doors are different, but provide the same easy operation. The ILD is available with either one or two cylinders. The dual cylinder model meets two person integrity (TPI) requirements for protection of Category I conventional arms, ammunition, and explosives (AA&E), chemical, and nuclear weapons.

TEST PARAMETERS, PERFORMANCE REQUIREMENTS AND VERIFICATION STANDARDS TABLE

ILD systems must undergo a battery of tests and evaluation to obtain DOD approval for use to secure igloo and magazine doors. This includes environmental, unauthorized entry, operational, wear resistance, and quality assurance testing.

Dual key ILD on sliding door

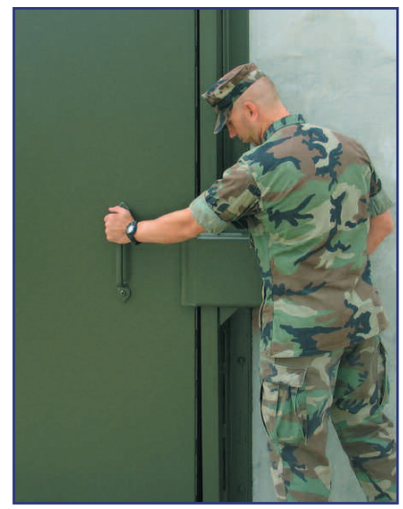

TEST PARAMETERS	REQUIREMENTS	TEST STANDARDS
ENVIRONMENTAL		
High Temperature	Operates effectively at 160∞F	MIL-STD-810E Method 501.3
Low Temperature	Operates effectively at -60∞F	MIL-STD-810E Method 502.3
Salt Fog Environment	Operates effectively in corrosive, moist environment	MIL-STD-810E Method 509.3, ASTM G-85 (Ref 8) ASTM G 112-92 (Ref 9)
Sand and Dust	Operates effectively on a simulated door panel after exposure to driven sand and dust	MIL-STD-810E Method 510.3
Vibration	Operates effectively after exposure to prescribed vibration	MIL-STD-810E Method 514.4 ASTM D 3580 (Ref 10)
Icing/Freezing Rain	Operates effectively on a simulated door panel under icy conditions and after thawing	MIL-STD-810E Method 521.1
UNAUTHORIZED ENTRY		
Surreptitious Neutralization Resistance	Resists 15 minutes of surreptitious neutralization attempts by picking, shimming, impressioning, and bypassing methods	MIL-P-43607G
Forced Entry	Simulated magazine door with ILD resists forced entry for 10 minutes using medium threat including unlimited hand- and battery-powered tools; limited thermal tools	DOD 5100.76-M (Ref 11) Section 3.0 and NCEL OR# 098-09-88
Pull Test	Simulated door resists being pulled open with a 12,000-lb force	MIL-P-43607G
Operational	Operates effectively without a design failure for the duration of the test (problems due to ILD operator, installation, or manufacture errors will be corrected and the test resumed)	TM 56-90-04
WEAR RESISTANCE		
Cycle Fatigue	Operates effectively after 10,000 cycles	MIL-P-43607G
MANUFACTURING QUALITY CONTROL		
Surface Abrasion	Meets material specification requirements as described in MIL-A-8625E and NFESC procurement contracts for ILD production units	FED-STD-141C, Method 6192.1 (Ref 12)
Coating Thickness	Meets material specification requirements as described in MIL-A-8625E	ASTM B244 (Ref 13)

ILD

APPROVED ILD APPLICATIONS

Single Sliding Magazine Door
Double Swinging Magazine Door

NEW APPLICATION IN DEVELOPMENT & TESTING

Double Sliding Magazine Door
Personnel Door (Armory)
Universal Mount (For all Swinging & Sliding Magazine Doors)
Biometric Operator Verification
Key Guide Storage System

Applying New Thinking to the
Next Generation of High Security Locking Systems

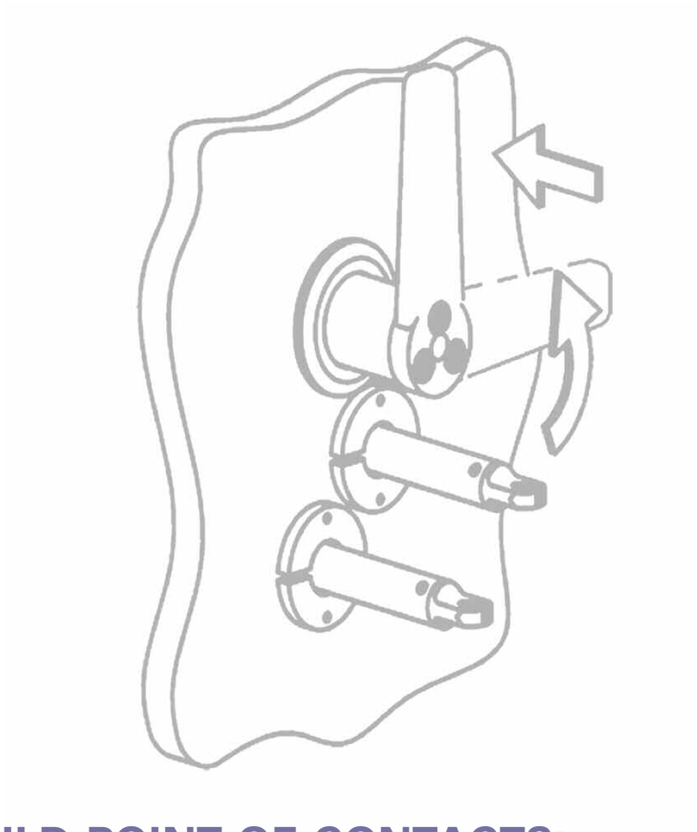

ILD POINT OF CONTACTS:

TECHNICAL MANAGER
Phone: (805) 982-1567, DSN 551-1567
Email: nfesclock-tm@navy.mil

PROJECT MANAGER
Phone: (805) 982-3558, DSN 551-3558
Email: nfescild_lock_project_manager@navy.mil

For Current ILD Ordering & Cost Information, go to:
http://locks.nfesc.navy.mil/ILDOrder.htm

The ILD offers unique key, shutter plate, bi-directional mounting and other features engineered to raise the bar on locking systems.

- Replaces high security padlocks & hasps to secure Department of Defense (DoD) weapons storage magazines for conventional arms, ammunition, & explosives.
- Used on structures protecting chemical and nuclear weapons.